Rev	Description	Rev. by	Date

Pystyleikkaus

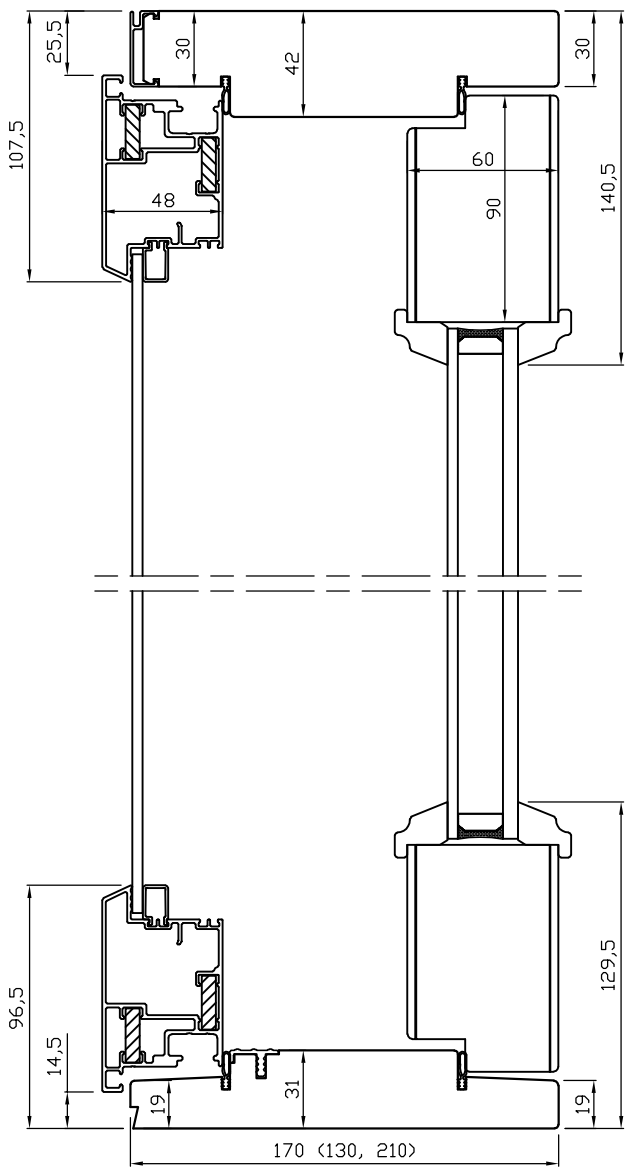

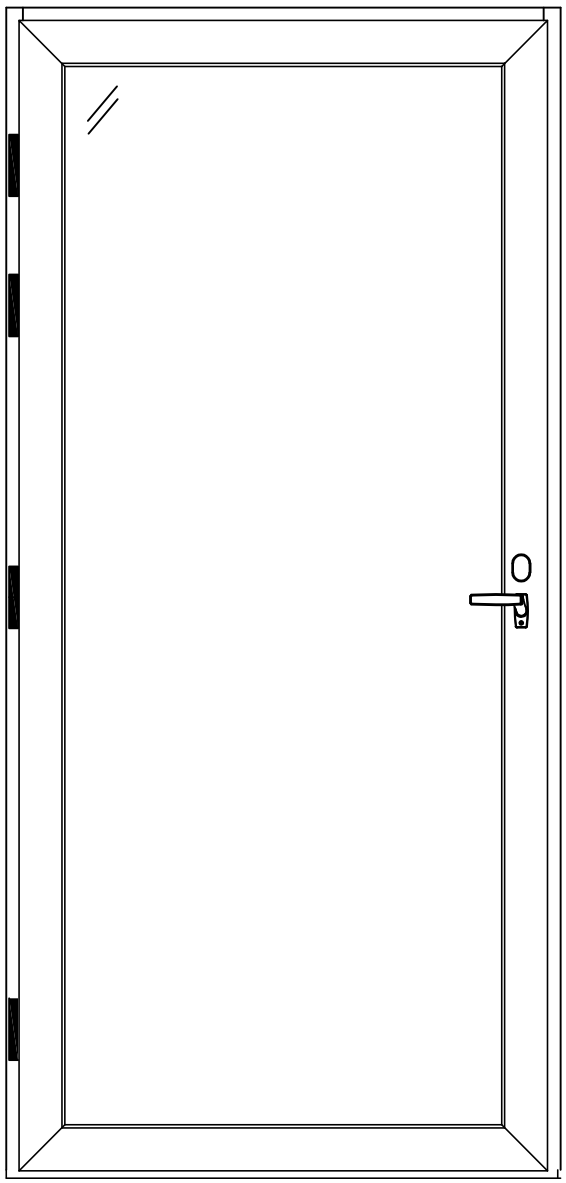

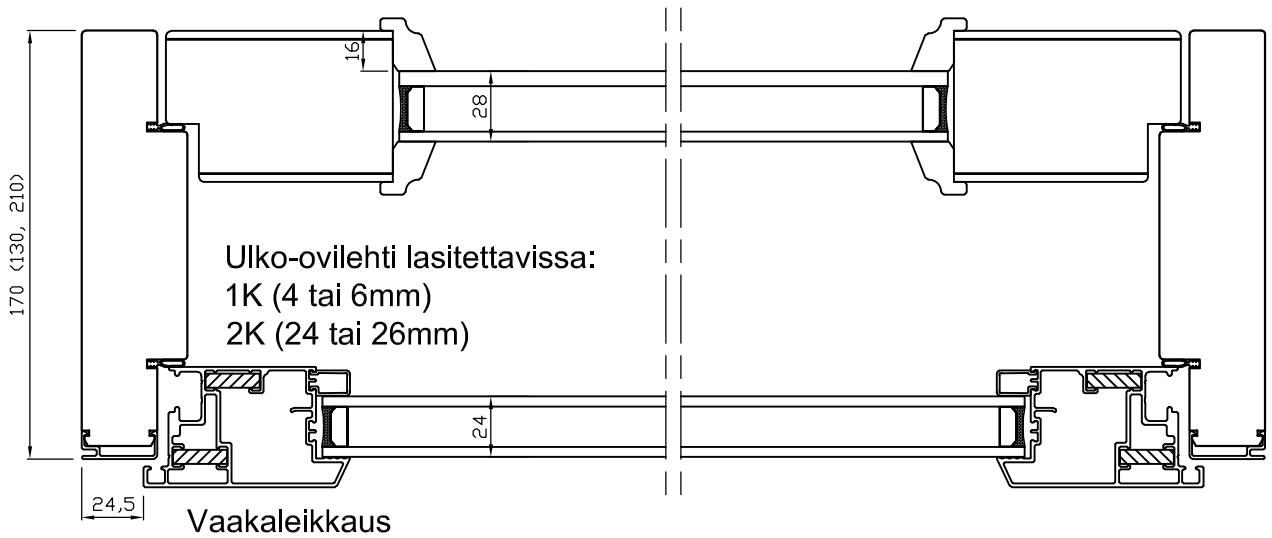

Ulko-ovilehti lasitettavissa:
1K (4 tai 6mm)
2K (24 tai 26mm)

Vaakaleikkaus

Pihla PRO	Product Category: Door	Product Type: IOSUA		
	IOSUA/20 KL Rakennepiirustus	Designed by: JR	Designed date: 31.1.2020	View orientation
		Approved by	Approved date	Scale: 1:3
		Drawing Number		Revision: (A)

We reserve all rights in this document and in the information contained therein. Reproduction, use or disclosure to third parties without express authority is strictly forbidden. INWIDO